BEST MANAGEMENT PRACTICES (BMPs)

Pollution through storm runoff is intensified at construction sites due to the removal of the natural ground cover of the site as well as the introduction of hazardous chemicals and wastes to the area. Measures are required both during construction and after the completion of construction to stabilize the site. Stabilization of the site during construction activities consists of the installation of temporary or permanent measures to prevent erosion or to intercept sediment prior to it leaving the site. This can be accomplished through the use of ground cover mulching, paving, silt fences, and sediment basins along with construction methods to reduce the disturbed areas of construction.

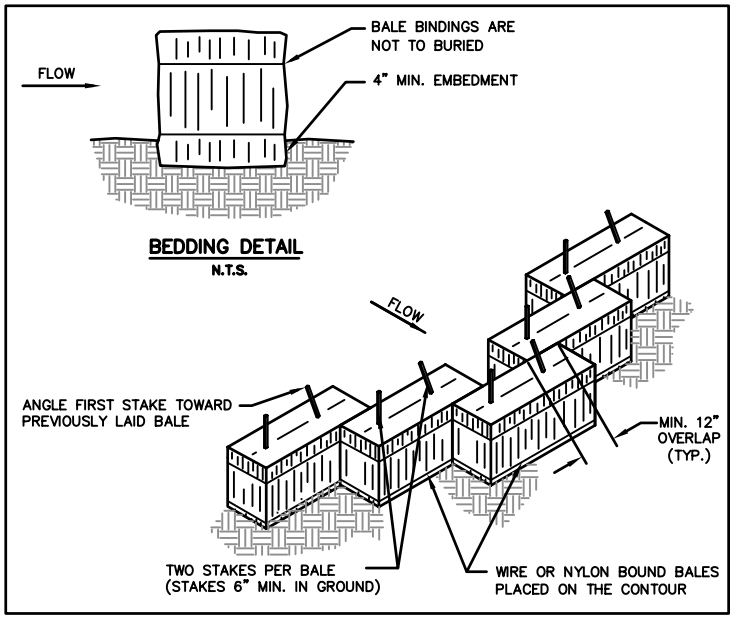

STRAW BALE DIKE

Inspections:

- **Performed every seven days or after 1/2 inch rain**
- **Major observation to be made during inspections:**
  - **-locations of discharges of sediment or other polutants**
  - **-locations BMPs that are needing maintenance**
  - **-locations BMPs that are not performing, failing to operate, or were inadequate**
  - **-locations where additional BMPs are needed**

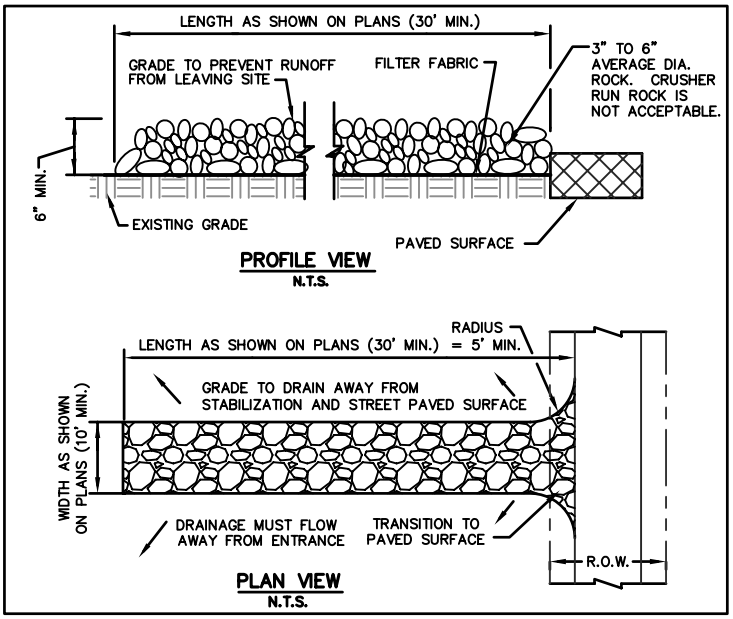

STABILIZED CONSTRUCTION ENTRANCE

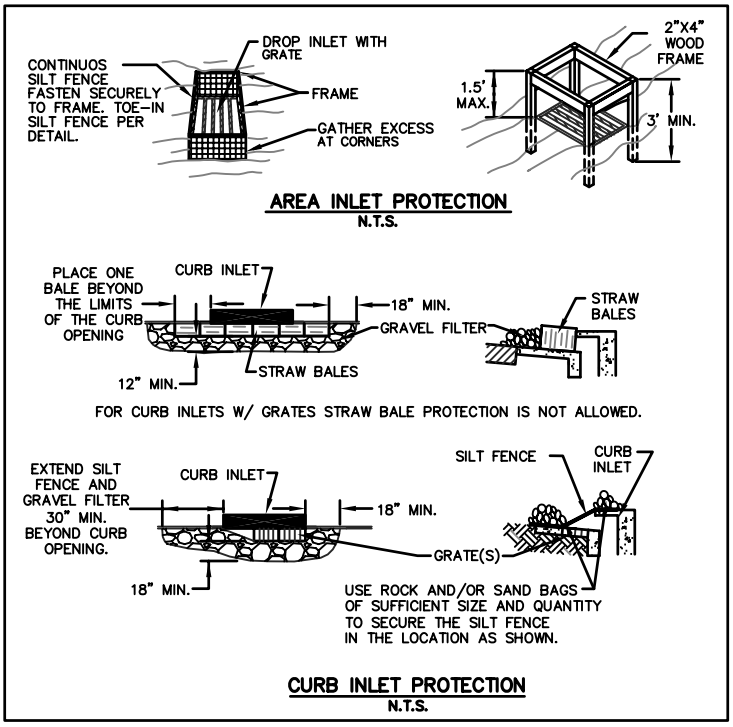

INLET PROTECTION FILTER BARRIER

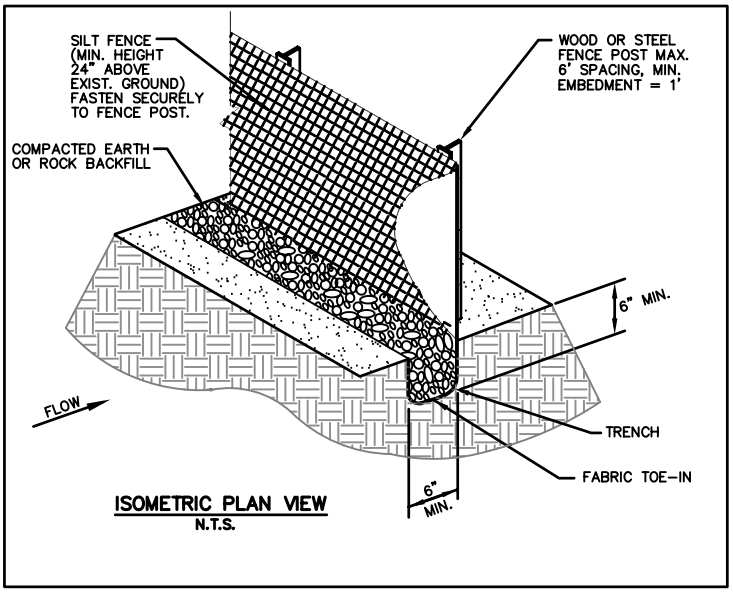

SILT FENCE

NOTES:

1) The silt fence shall be a woven, polypropylene, polyester or polyamide material that shall be resistant to ultraviolet degradation, and rot. The edges of woven fabrics shall be sealed or selvaged to prevent raveling. The fabric shall exhibit the following physical properties when sampled and tested using the specified methods.

PROPERTY	TEST METHODS	VALUES
Grab Tensile	ASTM D-4632	100 Lb. (Min.)
Elongation @ Yield	ASTM D-4632	10-40% (Max.)
Trapezoid Tear	ASTM D-4533	50 Lb. (Min.)

PROPERTY	TEST METHODS	VALUES
UV Resistance	ASTM D-4355	80% (Min.)
Apparent Opening Size	ASTM D-4751	20-50 US Sieve
Permitivity 1/sec	ASTM D-4491	0.1 (Min.)

Prefabricated fence systems may be used provided they meet all of the material requirements.

2) Erosion control measures shall remain until a 70% stand of grass is established.

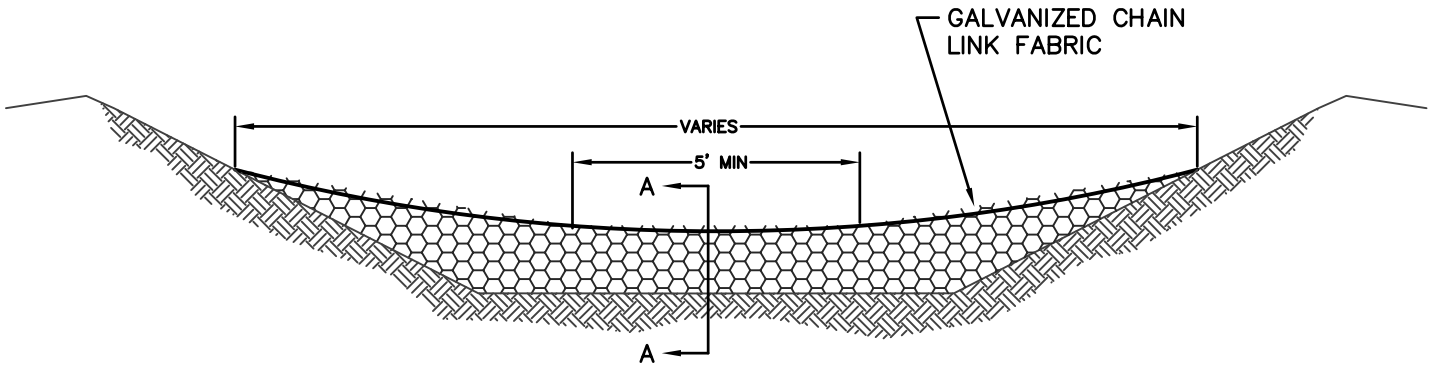

1. Side slopes should be 2:1 or flatter.
2. Filter dams should be embedded a minimum of 6" into existing ground.
3. Rock filter dams shall be secured with 2¼" mesh, 11½ gauge chain link fabric. The rock shall be placed on the mesh to the height & slopes specified. The fabric shall be folded over the rock and tightly secured to itself using aluminum tie wires spaced on 12 inch centers. Lap sheets a minimum of 12 inches and connect with aluminum tie wires spaced on 12 inch centers.

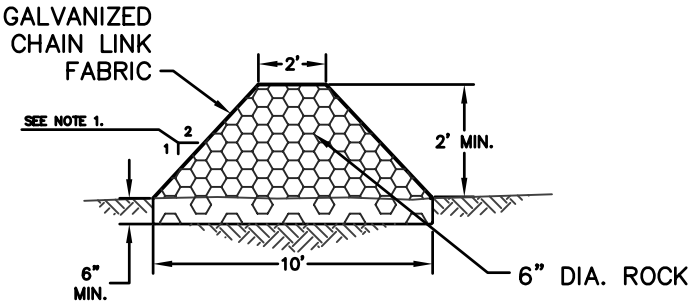

SECTION A–A

ROCK FILTER DAM