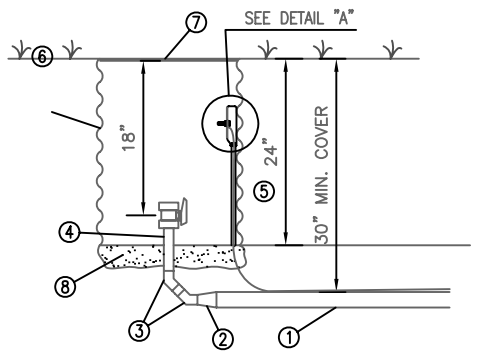

TERMINAL FLUSHING CONNECTION

SCALE: 1" = 1'-0"

1. 2" CL. 200 PVC PIPE, DR-21 LOW PRESSURE FORCE MAIN
2. 2"x 1 1/4" SCHEDULE 80 PVC REDUCER WITH SOLVENT WELD ENDS
3. 1 1/4"x 45° SCHEDULE 80 PVC BEND WITH SOLVENT WELD ENDS
4. 1 1/4" CL. 200 PVC PIPE, DR-21
5. 1 1/4" TRUE UNION FULL OPENING SCHEDULE 80 PVC BALL VALVE
6. CORRUGATED METER CAN, 18" DIA. x 24" HIGH
7. CAST IRON LOCKING LID WITH "SEWER" ON LID
8. AGGREGATE BEDDING AND SUPPORT

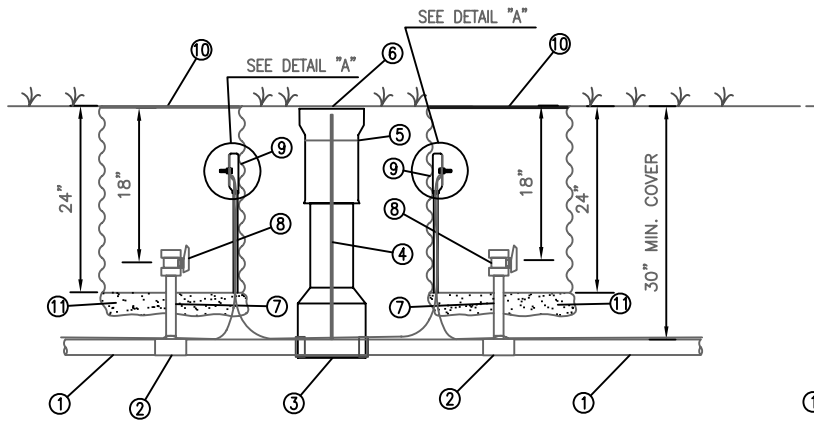

INLINE FLUSHING CONNECTION

INSTALL AT 400' INTERVALS

SCALE: 1" = 1'-0"

1. 2" CL. 200 PVC PIPE, DR-21 LOW PRESSURE FORCE MAIN
2. 2"x 1 1/4" SCHEDULE 80 PVC TEE WITH SOLVENT WELD ENDS
3. 2" TRUE UNION FULL OPENING SCHEDULE 80 PVC BALL VALVE FOR BURIED SERVICE
4. EXTENSION STEM WITH TEE-HEAD
5. CENTERING SPACER
6. TYLER 142-Q VALVE BOX WITH "SEWER" ON LID, OR AN APPROVRED EQUAL
7. 1 1/4" CL. 200 PVC PIPE, DR-21
8. 1 1/4" TRUE UNION FULL OPENING SCHEDULE 80 PVC BALL VALVE WITH LEVER HANDLE
9. CORRUGATED METER CAN, 18" DIA. x 24" HIGH
10. CAST IRON LOCKING LID WITH "SEWER" ON LID
11. AGGREGATE BEDDING AND SUPPORT

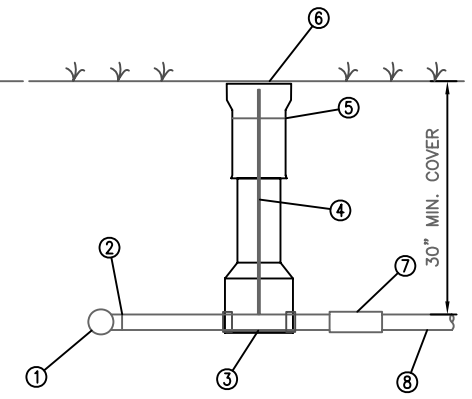

SERVICE LINE TO FORCE MAIN

SCALE: 1" = 1'-0"

1. 2" CL. 200 PVC PIPE, DR-21 LOW PRESSURE FORCE MAIN
2. 2"x 1 1/4" SCHEDULE 80 PVC TEE WITH SOLVENT WELD ENDS
3. 1 1/4" TRUE UNION FULL OPENING SCHEDULE 80 PVC BALL VALVE FOR BURIED SERVICE
4. EXTENSION STEM WITH TEE-HEAD
5. CENTERING SPACER
6. TYLER 142-Q VALVE BOX WITH "SEWER" ON LID, OR AN APPROVRED EQUAL
7. 1 1/4" SCHEDULE 40 PVC BALL CHECK VALVE WITH UNION FOR BURIED SERVICE
8. 1 1/4" CL. 200 PVC PIPE, DR-21 SERVICE LINE
9. 1 1/4"x 45° SCHEDULE 40 PVC BEND WITH SOLVENT WELD ENDS
10. SIMPLEX GRINDER PACKAGE

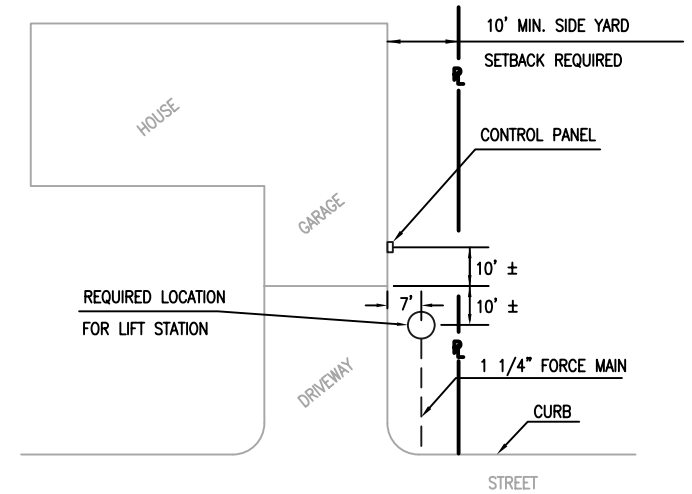

STANDARD LOCATION PLAN

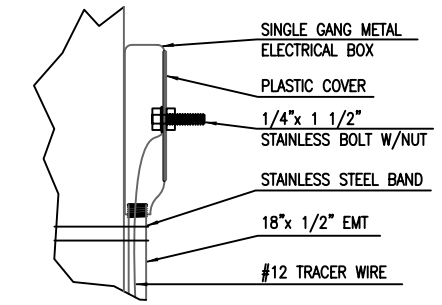

DETAIL "A"

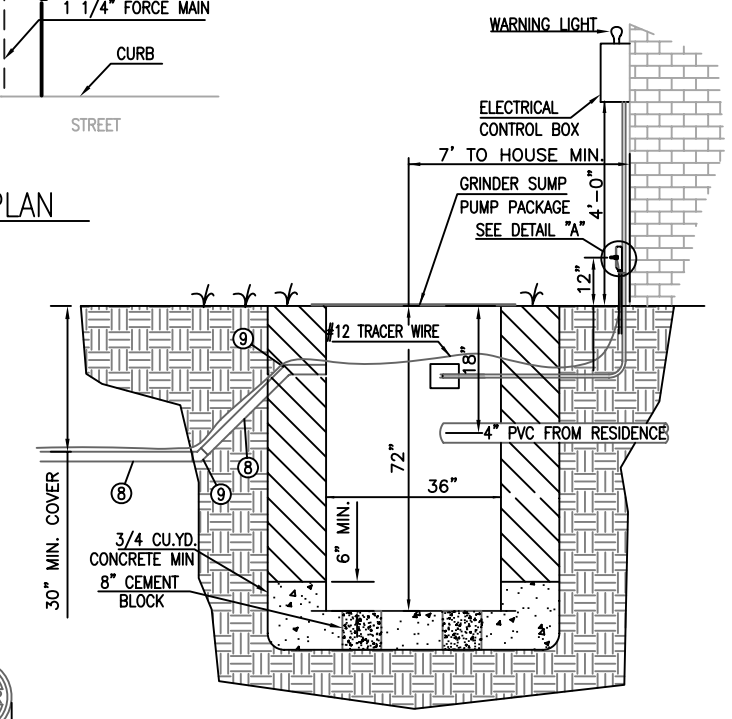

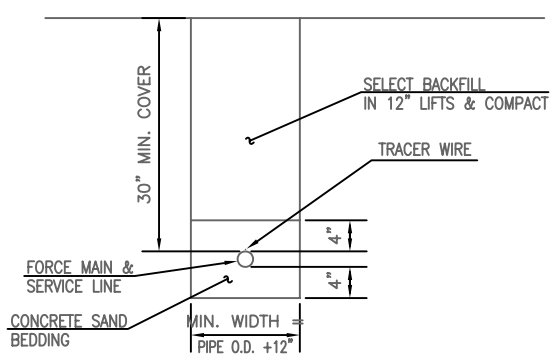

FORCE MAIN & SERVICE LINE BEDDING DETAIL

TRACER LINE

ALL LINES SHALL HAVE TRACER LINE ATTACHED TO AND BURIED WITH THE PIPE. THE TRACER LINE SHALL BE A NO. 12 SOLID, COPPER, INSULATED WIRE.

THE TRACER LINE SHALL BE ATTACHED TO THE PIPE AT INTERVALS NOT TO EXCEED 10 FEET WITH NYLON SELF LOCKING TIES OR 1 1/2" WIDE DUCT TAPE.

ALL SPLICING SHALL BE MADE WITH COPPER COMPRESSION TAP CONNECTORS, AS MANUFACTURED BY BURNDY, "CRIMPIT" CAT. NO. YC10C10, OR APPROVED EQUAL. ALL SPLICES SHALL BE WRAPPED WITH ELECTRICAL TAPE.

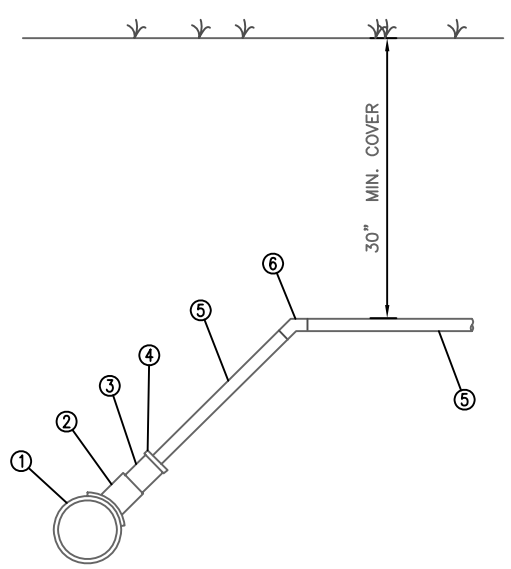

SERVICE LINE TO GRAVITY SEWER

SCALE: 1" = 1'-0"

1. GRAVITY SEWER MAIN
2. 4" DFW/HPI FLEXIBLE SADDLE TEE WITH STAINLESS STEEL STRAPS
3. 4" SCHEDULE 40 PVC PIPE
4. 1 1/4"x 4" SCHEDULE 40 ADAPTER
5. 1 1/4" CL. 200 PVC PIPE, DR-21 SERVICE LINE
6. 1 1/4"x 45° SCHEDULE 80 PVC BEND WITH SOLVENT WELD ENDS

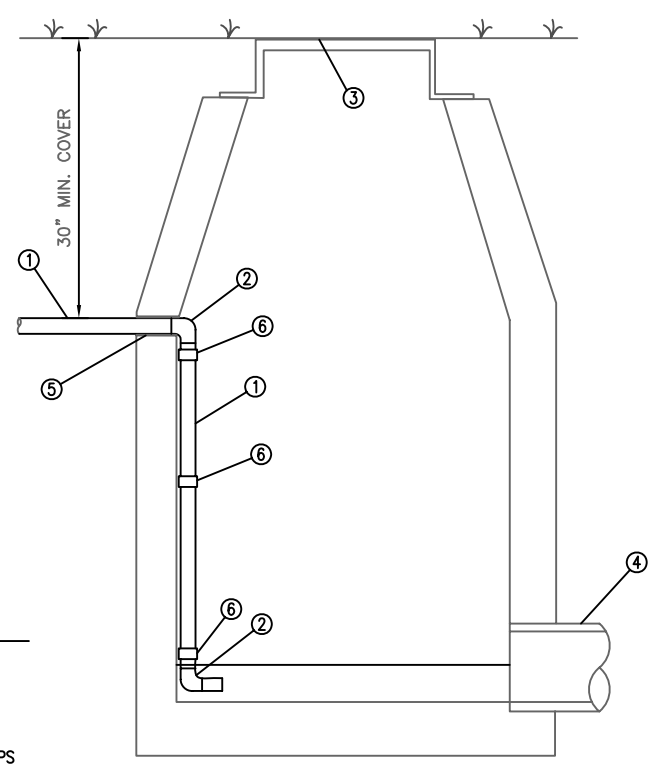

FORCE MAIN CONNECTION TO MANHOLE

SCALE: 1" = 1'-0"

1. 2" CL. 200 PVC PIPE, DR-21 LOW PRESSURE FORCE MAIN
2. 2"x 90° SCHEDULE 80 PVC BEND WITH SOLVENT WELD ENDS
3. MANHOLE
4. GRAVITY SEWER MAIN
5. NON-SHRINK GROUT
6. 1 1/2"x 1/4"STAINLESS STEEL STRAPS @ 2' O.C.

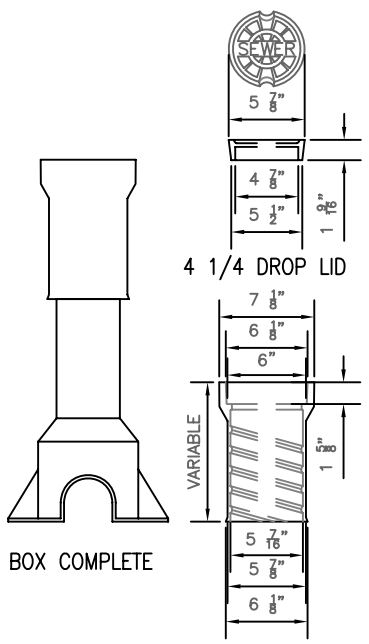

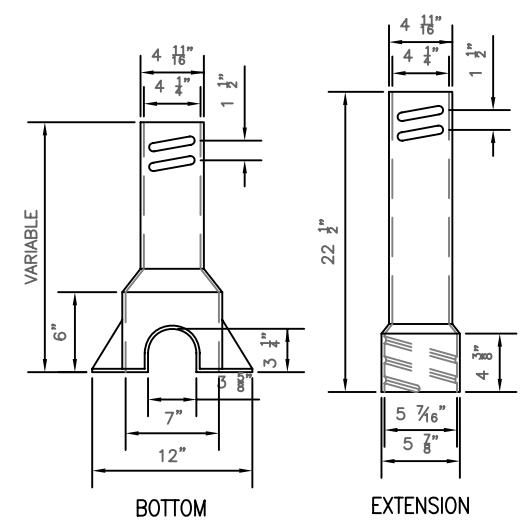

VALVE BOX DETAIL

TYLER 142-Q OR AN APPROVED EQUAL

BARTLESVILLE OKLAHOMA	CITY OF BARTLESVILLE ENGINEERING SERVICES	APPROVED BY CITY ENGINEER JULY 2007
	LOW PRESSURE SEWER SYSTEM STANDARD DETAILS	